7. Manual Transmission Assembly

A: REMOVAL

1) Set the vehicle on a lift. Open the front hood, and support it with the stay.

NOTE:
Set the hood stay into the specified hole.
2) Remove the front wheels.
3) Disconnect the ground cable from battery.
4) Remove the intercooler assembly.
<Ref. to IN(H4DOTC)-13, REMOVAL, Intercooler.>
5) Lift up the vehicle, and remove the under cover.
6) Lower the vehicle and disconnect the connector on top of the transmission.

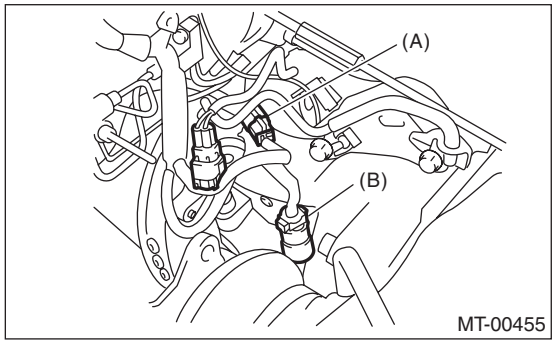

(A) Transmission connector
(B) Vehicle speed sensor connector

7) Disconnect the ground cable on the upper side of the transmission case and body.

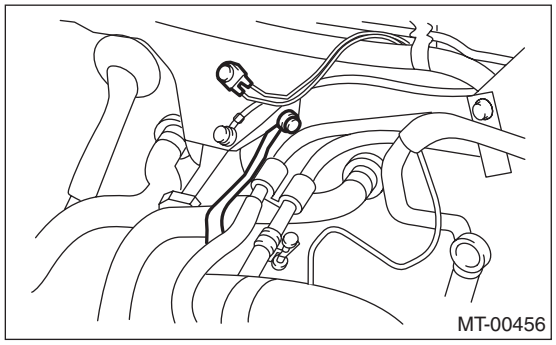

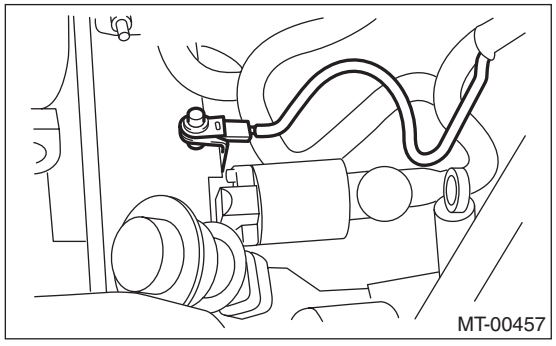

8) Remove the starter assembly. <Ref. to SC(H4SO)-8, REMOVAL, Starter.>
9) Remove the operating cylinder.

NOTE:
Hang the removed operating cylinder with a piece of wire.

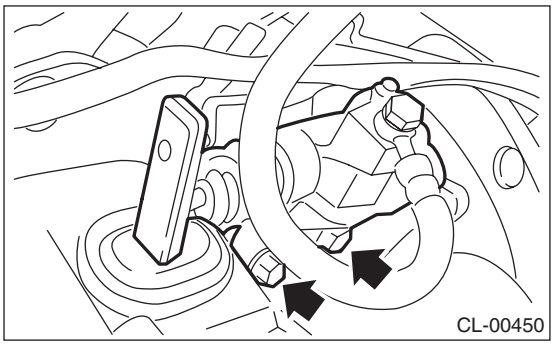

10) Remove the pitching stopper and pitching stopper bracket.
11) Set the ST.
ST 41099AC000 ENGINE SUPPORT

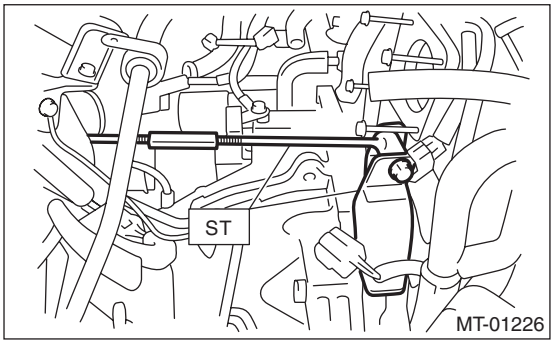

12) Remove the clutch release shaft.
(1) Remove the plug using a hexagon wrench.
(2) Attach a 6 mm (0.24 in) bolt to the release shaft, and pull out the release shaft.
(3) Lift the release fork, and remove from the claw of the release bearing. Pull the release fork to the engine side, and make it so that it moves freely.
13) Remove the throttle body. <Ref. to FU(H4DOTC)-16, REMOVAL, Throttle Body.>
14) Remove the bolts which hold upper side of transmission to engine.

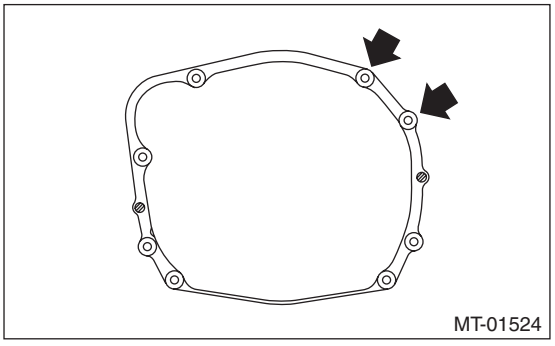

15) Lift up the vehicle.

16) Remove the center and rear exhaust pipes and the muffler. <Ref. to EX(H4DOTC)-10, REMOVAL, Center Exhaust Pipe.>, <Ref. to EX(H4DOTC)-15, REMOVAL, Rear Exhaust Pipe.>, <Ref. to EX(H4DOTC)-17, REMOVAL, Muffler.>

CAUTION:
When removing the exhaust pipes, be careful each exhaust pipe does not drop out.

17) Drain the transmission gear oil. <Ref. to 6MT-28, Transmission Gear Oil.>
18) Remove the propeller shaft. <Ref. to DS-15, REMOVAL, Propeller Shaft.>
19) Remove the front stabilizer bolt.

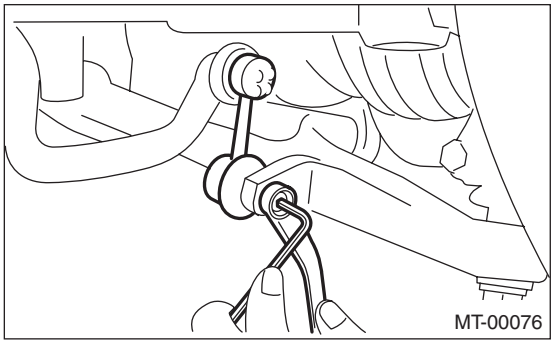

20) Remove the ball joint of the transverse link from the housing.

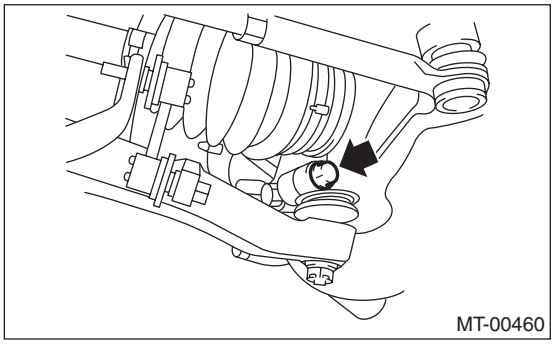

21) Remove the front drive shaft. <Ref. to DS-31, REMOVAL, Front Drive Shaft.>
22) Hang the front drive shaft with string.
23) Set the transmission jack under the transmission, and remove the front crossmember and rear crossmember.

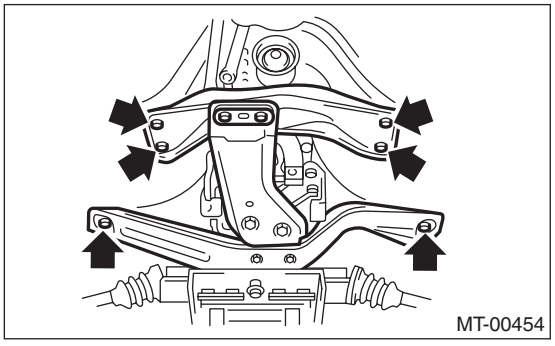

24) Move the transmission to the right side of the vehicle, and remove the joint COMPL, stay bolts and reverse check cable.

NOTE:
If the transmission is not moved aside, the joint COMPL and stay bolts may contact the body and cause damage.

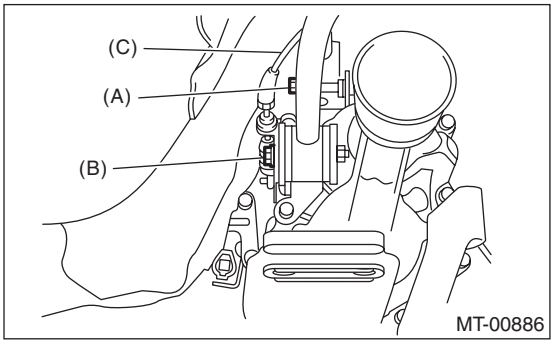

(A) Joint COMPL bolt
(B) Stay bolt
(C) Reverse check cable

25) Tighten the turnbuckle of the ST to tilt the engine assembly towards the back.

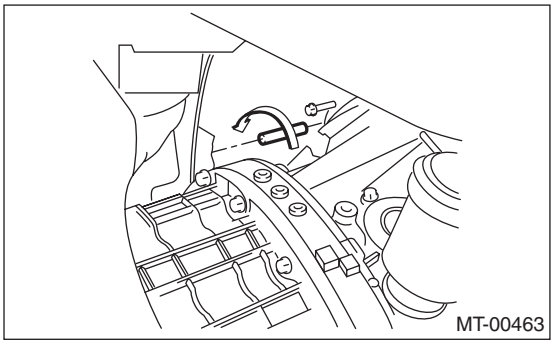

26) Remove the bolts holding the engine and transmission together, and remove the transmission from the vehicle.

NOTE:
- When pulling towards the rear during removal, be careful not to hit the transmission against the body.
- The clutch pipe and breather pipe may interfere with each other. Remove carefully.

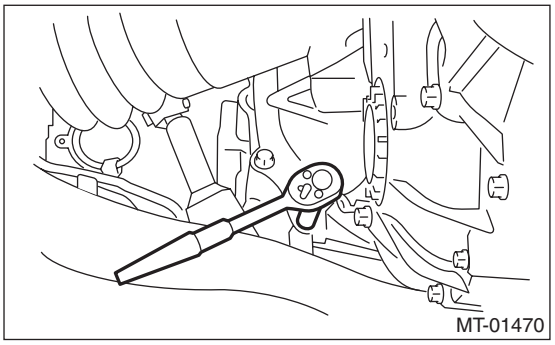

27) Remove the transmission cushion rubber from transmission.

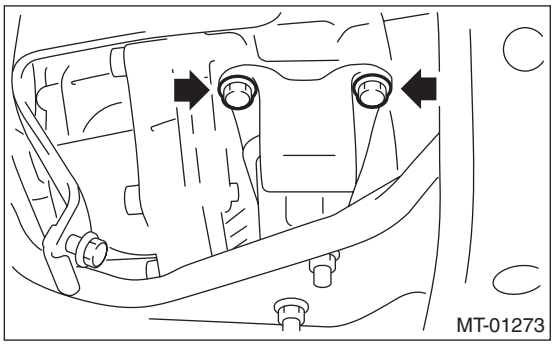

B: INSTALLATION

1) Set the release fork, release bearing and release shaft to the transmission. <Ref. to CL-18, INSTALLATION, Release Bearing and Lever.>
2) Install the transmission cushion rubber to the transmission.

Tightening torque:
35 N·m (3.6 kgf-m, 25.8 ft-lb)

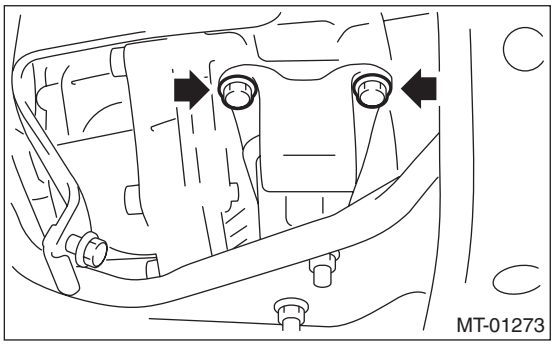

3) Replace the front differential side retainer oil seal.
   (1) Remove the oil seal by using flat tip screwdriver etc.
   (2) Apply gear oil to the lip of new oil seals.
   (3) Install a new oil seal using ST.

ST 18675AA000 DIFFERENTIAL SIDE OIL SEAL INSTALLER

NOTE:
Be sure to replace the differential side oil seal after the procedure of removing front drive shaft from transmission.

4) Loosen the turnbuckle of ST to return the engine to its original position.

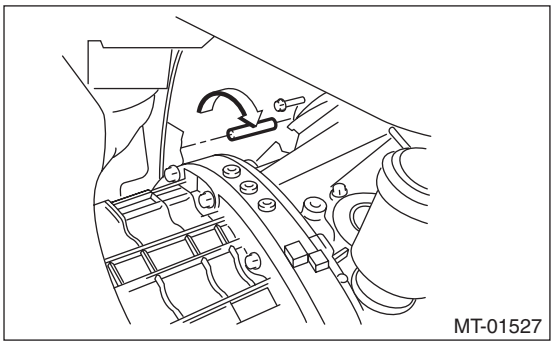

5) Install the transmission.
6) Tighten the bolts and nuts which hold the lower side of transmission to the engine.

NOTE:
- Make sure that the main shaft spline is completely inserted.
- Make sure that the rear end of the engine is set low.

Tightening torque:
50 N·m (5.1 kgf-m, 36.9 ft-lb)

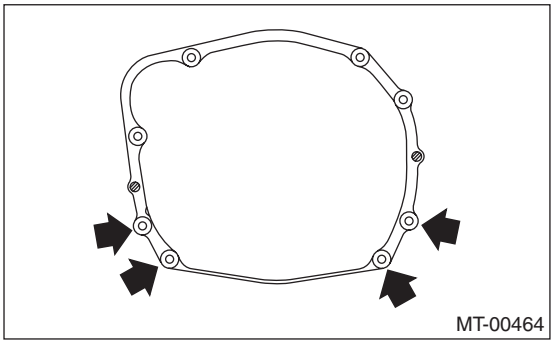

7) Move the transmission to the right side of the vehicle, and attach the joint COMPL, stay bolts and reverse check cable.

Tightening torque:
T1: 11.8 N·m (1.2 kgf-m, 8.7 ft-lb)
T2: 32 N·m (3.3 kgf-m, 23.6 ft-lb)

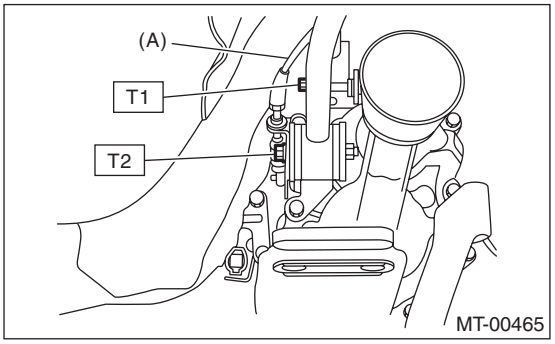

(A) Reverse check cable

8) Install the front crossmember and rear crossmember.

Tightening torque:
T1: 70 N·m (7.1 kgf-m, 51.6 ft-lb)
T2: 140 N·m (14.3 kgf-m, 103 ft-lb)

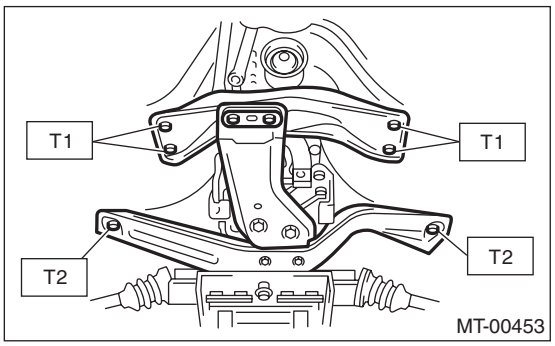

9) Tighten the bolts which hold the upper side of the transmission to the engine.

Tightening torque:
50 N·m (5.1 kgf-m, 36.9 ft-lb)

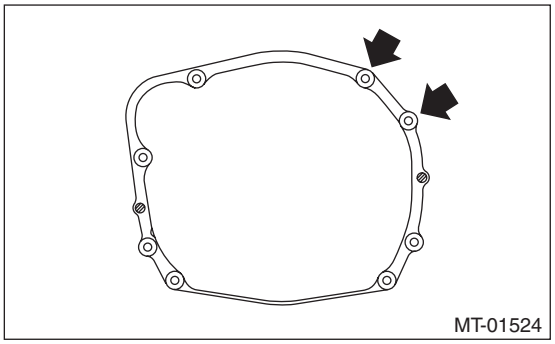

10) Make sure that the release bearing is completely inserted.

NOTE:
- Push the release fork towards the operating cylinder side until a clicking sound is heard. Pull the release fork towards the engine side. If the release fork is not in contact with the case, the setting is complete.
- Confirm that the boot cover is set securely.

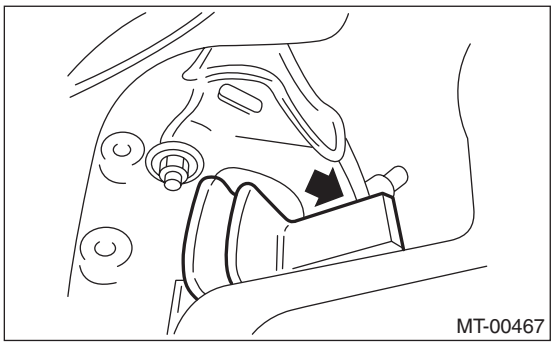

11) Install the pitching stopper bracket.

Tightening torque:
41 N·m (4.2 kgf-m, 30.2 ft-lb)

12) Install the pitching stopper.

Tightening torque:
T1: 50 N·m (5.1 kgf-m, 36.9 ft-lb)
T2: 58 N·m (5.9 kgf-m, 42.8 ft-lb)

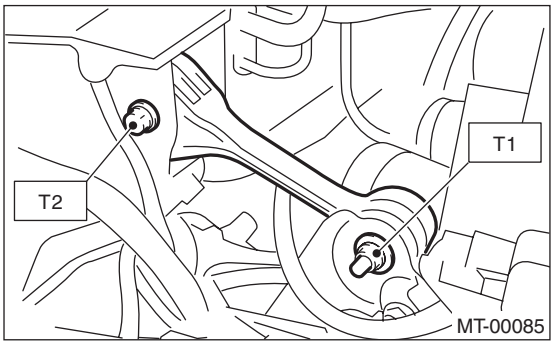

13) Install the throttle body. <Ref. to FU(H4DOTC)-16, INSTALLATION, Throttle Body.>
14) Install the operating cylinder.

Tightening torque:
41 N·m (4.2 kgf-m, 30.2 ft-lb)

NOTE:
Check that the clutch hose is routed properly.

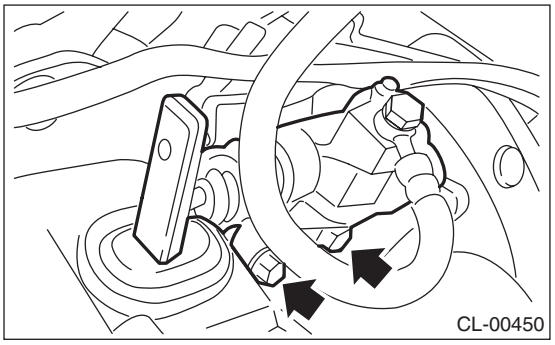

15) Install the starter assembly. <Ref. to SC(H4SO)-8, INSTALLATION, Starter.>

16) Attach the ground cable to the transmission and body.

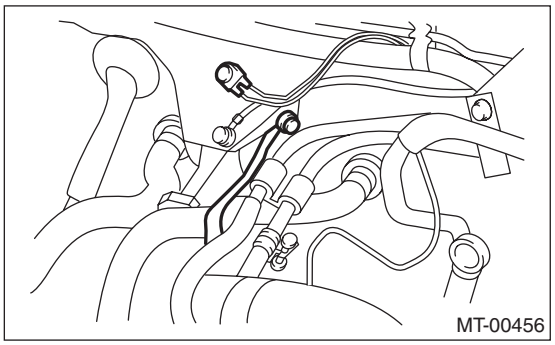

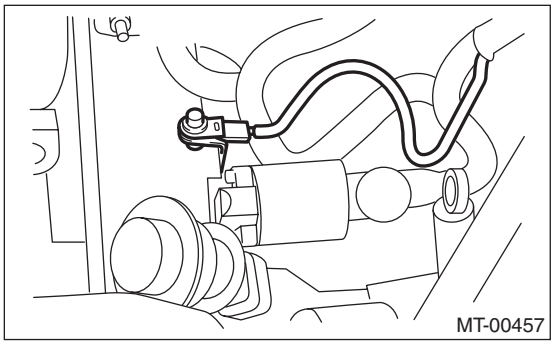

17) Connect the connector on the top of the transmission.

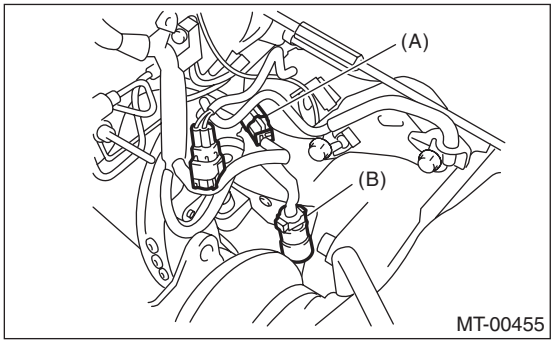

(A) Transmission connector
(B) Vehicle speed sensor connector

18) Set the ST to the differential side retainer.
ST 28399SA010 OIL SEAL PROTECTOR

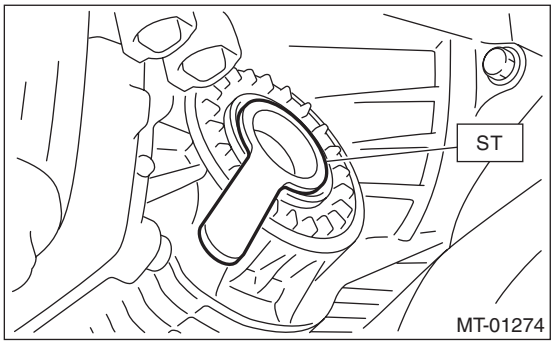

19) Install the front drive shaft into the transmission.

NOTE:
Replace the circlip of drive shaft with a new part.

20) Install the front drive shaft into transmission, remove the ST and insert the drive shaft securely.
ST 28399SA010 OIL SEAL PROTECTOR

21) Install the ball joint of the transverse link into the housing.

Tightening torque:
50 N·m (5.1 kgf-m, 36.9 ft-lb)

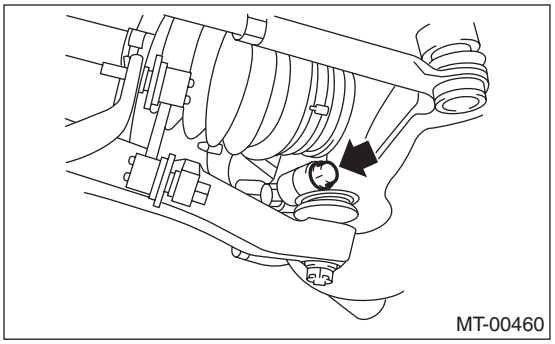

22) Install the front stabilizer nut.

Tightening torque:
45 N·m (4.6 kgf-m, 33.2 ft-lb)

NOTE:
Use a new self-locking nut.

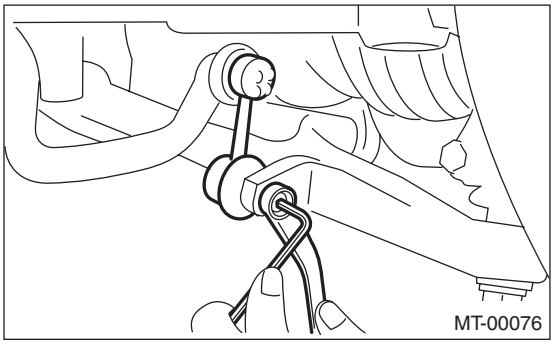

23) Install the propeller shaft. <Ref. to DS-16, INSTALLATION, Propeller Shaft.>

24) Install the center exhaust pipe.
<Ref. to EX(H4DOTC)-11, INSTALLATION, Center Exhaust Pipe.>

25) Install the rear exhaust pipe and muffler. <Ref. to EX(H4DOTC)-15, INSTALLATION, Rear Exhaust Pipe.> <Ref. to EX(H4DOTC)-17, INSTALLATION, Muffler.>

26) Install the under cover.

27) Install the intercooler assembly.
<Ref. to IN(H4DOTC)-14, INSTALLATION, Intercooler.>

28) Connect the ground cable to battery.